LINESPOT LED EMERGENCY LIGHT Y5071W

24-230 V 50/60 Hz AC, DC | LED | IP 20 | RAL 9003 | 650 °C | -o- | CE | EN 60598-2-22 | III

24-230 V centrally supplied LED emergency light (Invidually packed TWT5071W)

Linespot is especially designed for high corridor lighting. It utilizes the latest LED technology. The luminaire optics are designed to give long and a narrow pattern area that illuminates the escape route efficiently, and enables longer distances between the luminaires.

Linespot's small size and stylish design enables the implementation of a energy efficient emergency lighting without visually disrupting the interiors atmosphere.

We reserve the rights to make modifications without notice.
Copyright © 2024 Teknoware. All rights reserved.
Date: April 29, 2024 | Source:
www.teknoware.com/en/emergency-lighting-1/linespot-led-emergency-light-y5071w

Teknoware Oy | P.O. Box 19, 15101 Lahti | Ilmarisentie 8, 15200 Lahti Finland
Tel +358 3 883 020 | VAT-number FI01494751 | teknoware.com | emexit@teknoware.com

Product Code	Y5071W
Mounting (standard)	recess
Customs Code	94056080
GTIN Code	6438045017303
ETIM Product Class	EC001957
Length	385 mm
Width	115 mm
Height	95 mm
Weight	0,5 kg
Max Input Power VA	7,5 VA (24 V), 11 VA (230 V)
Max Input Power W	4 W (24 V), 4 W (230 V)
Nominal Supply Voltage	24-230 V, 50/60 Hz AC, DC
Protection Class	III (24 V), I (230 V)
IP Class	IP20
Temperature Range Min - Max	-30...+50 °C
Glow Wire Test of Plastic Materials	650 °C
Light Source	LED
Body Material	plastic
Aperture for Recess Mounting	ø75 mm
Colour	RAL9003
Electrical Installation	2 x 2,5 mm² (24 V), 3 x 2,5 mm² (230 V)
Luminous Flux	265 lm

Emergency lighting for escape routes (ceiling mounting)

Table of 1 lux for escape routes in the middle line according to the norm EN 1838.
Level of measurement 0,02 m, measurement result with battery operation.

We reserve the rights to make modifications without notice.
Copyright © 2024 Teknoware. All rights reserved.
Date: April 29, 2024 | Source:
www.teknoware.com/en/emergency-lighting-1/linespot-led-emergency-light-y5071w

Teknoware Oy | P.O. Box 19, 15101 Lahti | Ilmarisentie 8, 15200 Lahti Finland
Tel +358 3 883 020 | VAT-number FI01494751 | teknoware.com | emexit@teknoware.com

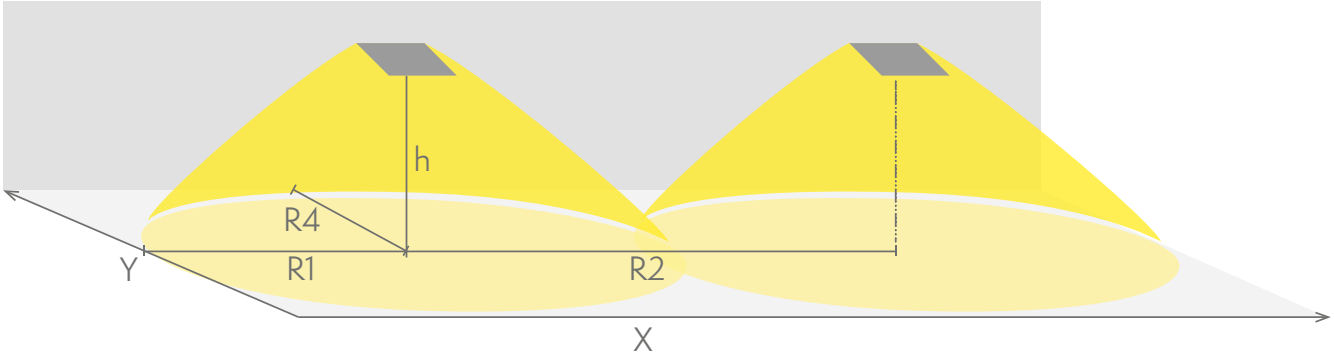

R1 distance from wall (X axis)
R2 installation distance between lights (X axis)
R4 distance from wall (Y axis)

Y5071W

Mounting height (m)	Below the light lux	R1 (m)	R2 (m)	R4 (m)
		1 lux	1 lux	1 lux
2,5	40	5	11	1
4	15	6,5	17	1
6	6	7,5	20	1
8	3,5	7	21	1
10	2	6,5	21	1

We reserve the rights to make modifications without notice.
Copyright © 2024 Teknoware. All rights reserved.
Date: April 29, 2024 | Source:
www.teknoware.com/en/emergency-lighting-1/linespot-led-emergency-light-y5071w

Teknoware Oy | P.O. Box 19, 15101 Lahti | Ilmarisentie 8, 15200 Lahti Finland
Tel +358 3 883 020 | VAT-number FI01494751 | teknoware.com | emexit@teknoware.com

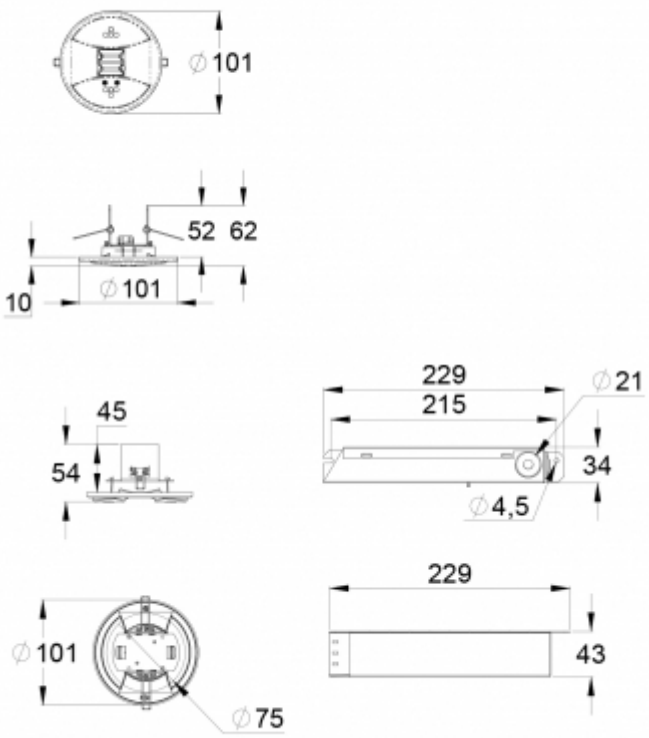

We reserve the rights to make modifications without notice.
Copyright © 2024 Teknoware. All rights reserved.
Date: April 29, 2024 | Source:
www.teknoware.com/en/emergency-lighting-1/linespot-led-emergency-light-y5071w

Teknoware Oy | P.O. Box 19, 15101 Lahti | Ilmarisentie 8, 15200 Lahti Finland
Tel +358 3 883 020 | VAT-number FI01494751 | teknoware.com | emexit@teknoware.com