SLIMSPOT II ZONE LOWBAY EMERGENCY LIGHT TWTA253WM

220-240 V 50/60 Hz AC | 3h | LED | IP 20 | RAL 9003 | 850 °C | -o- | CE | LUMI TEST | EN 1838 | EN 60598-2-22

Self-contained 3 h battery with Lumi Test self-testing emergency light

Slimspot II is a recessed emergency light that is effective and seamless. It has an elegant and minimalist appearance, so it blends in with the surroundings and architecture. The broad Slimspot II product family and range of optics offers many options to suit a variety of applications and systems. Slimspot II is designed for indoor lighting, and it has durable metal framing. The standard colour of the luminaire is white. On request, it is also possible to order Slimspot II in black and grey to match the surrounding environment.

The Slimspot II Zone Lowbay provides a broad, even pattern.

We reserve the rights to make modifications without notice.
Copyright © 2024 Teknoware. All rights reserved.
Date: May 20, 2024 | Source:
www.teknoware.com/en/emergency-lighting-1/slimspot-ii-zone-lowbay-emergency-light-twta253wm

Teknoware Oy | P.O. Box 19, 15101 Lahti | Ilmarisentie 8, 15200 Lahti Finland
Tel +358 3 883 020 | VAT-number FI01494751 | teknoware.com | emexit@teknoware.com

Product Code	TWTA253WM
Feature	Lumi Test
Mounting (standard)	recess
Customs Code	94056080
GTIN Code	6438045023786
ETIM Product Class	EC001957
Length	85 mm
Width	85 mm
Height	46 mm
Weight	0,8 kg
Backup	3 h
Max Input Power VA	6 VA
Nominal Supply Voltage	220-240 V, 50/60 Hz AC
Protection Class	I
IP Class	IP20
Temperature Range Min - Max	0...+35 °C
Glow Wire Test of Plastic Materials	850 °C
Light Source	LED
Body Material	metal
Aperture for Recess Mounting	ø75 mm
Colour	RAL9003
Electrical Installation	3 x 2,5 mm²
Luminous Flux	280 lm

Emergency lighting for escape routes (ceiling mounting)

Table of 1 lux for escape routes in the middle line according to the norm EN 1838.
Level of measurement 0,02 m, measurement result with battery operation.

We reserve the rights to make modifications without notice.
Copyright © 2024 Teknoware. All rights reserved.
Date: May 20, 2024 | Source:
www.teknoware.com/en/emergency-lighting-1/slimspot-ii-zone-lowbay-emergency-light-twta253wm

Teknoware Oy | P.O. Box 19, 15101 Lahti | Ilmarisentie 8, 15200 Lahti Finland
Tel +358 3 883 020 | VAT-number FI01494751 | teknoware.com | emexit@teknoware.com

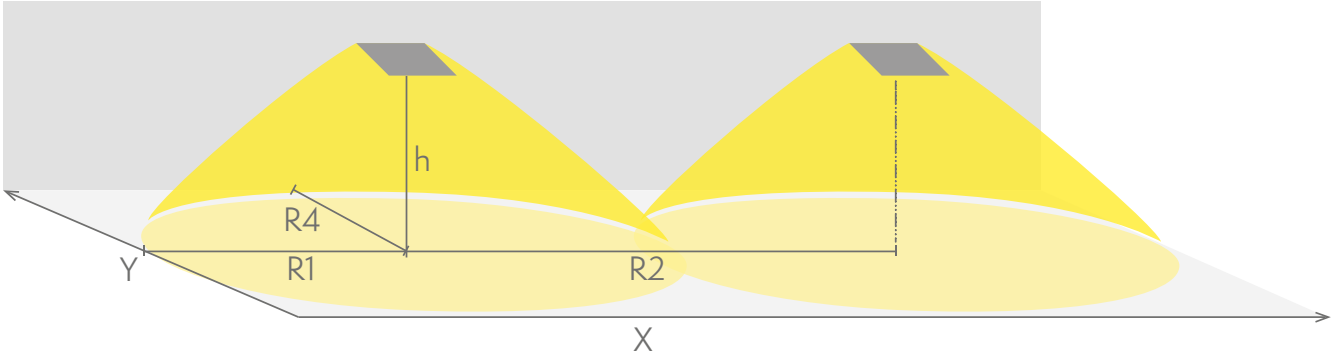

R1 distance from wall (X axis)
R2 installation distance between lights (X axis)
R4 distance from wall (Y axis)

TWTA253WM

Mounting height (m)	Below the light lux	R1 (m)	R2 (m)	R4 (m)
		1 lux	1 lux	1 lux
2,5	4,3	5	11	5
4	1,7	4	14	4

Emergency lighting for open areas (ceiling mounting)

Table of 0,5 lux for open areas according to the norm EN 1838, 0,5 m edge district is considered in the table.
Level of measurement 0,02 m, measurement result with battery operation.

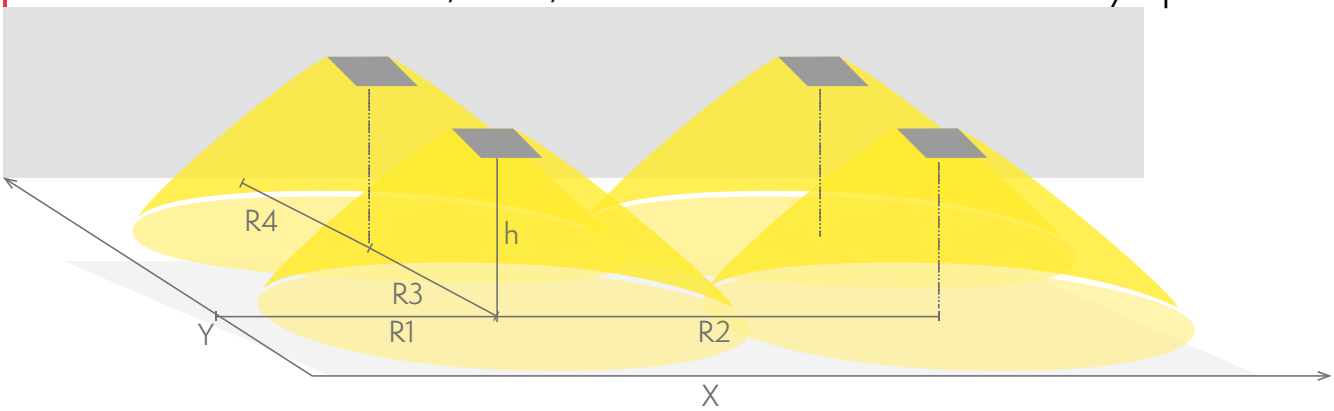

R1 distance from wall (X axis)
R2 installation distance between lights (X axis)
R3 installation distance between lights (Y axis)
R4 distance from wall (Y axis)

TWTA253WM

Mounting height (m)	Below the light lux	R1 (m)	R2 (m)	R3 (m)	R4 (m)
		0,5 lux	0,5 lux	0,5 lux	0,5 lux
2,5	4,3	5,5	10	10	5,5

We reserve the rights to make modifications without notice.
Copyright © 2024 Teknoware. All rights reserved.
Date: May 20, 2024 | Source:
www.teknoware.com/en/emergency-lighting-1/slimspot-ii-zone-lowbay-emergency-light-twta253wm

Teknoware Oy | P.O. Box 19, 15101 Lahti | Ilmarisentie 8, 15200 Lahti Finland
Tel +358 3 883 020 | VAT-number FI01494751 | teknoware.com | emexit@teknoware.com

Mounting height (m)	Below the light lux	R1 (m)	R2 (m)	R3 (m)	R4 (m)
4	1,9	6	11	11	6
6	1,6	6	11	11	6

We reserve the rights to make modifications without notice.
Copyright © 2024 Teknoware. All rights reserved.
Date: May 20, 2024 | Source:
www.teknoware.com/en/emergency-lighting-1/slimspot-ii-zone-lowbay-emergency-light-twta253wm

Teknoware Oy | P.O. Box 19, 15101 Lahti | Ilmarisentie 8, 15200 Lahti Finland
Tel +358 3 883 020 | VAT-number FI01494751 | teknoware.com | emexit@teknoware.com

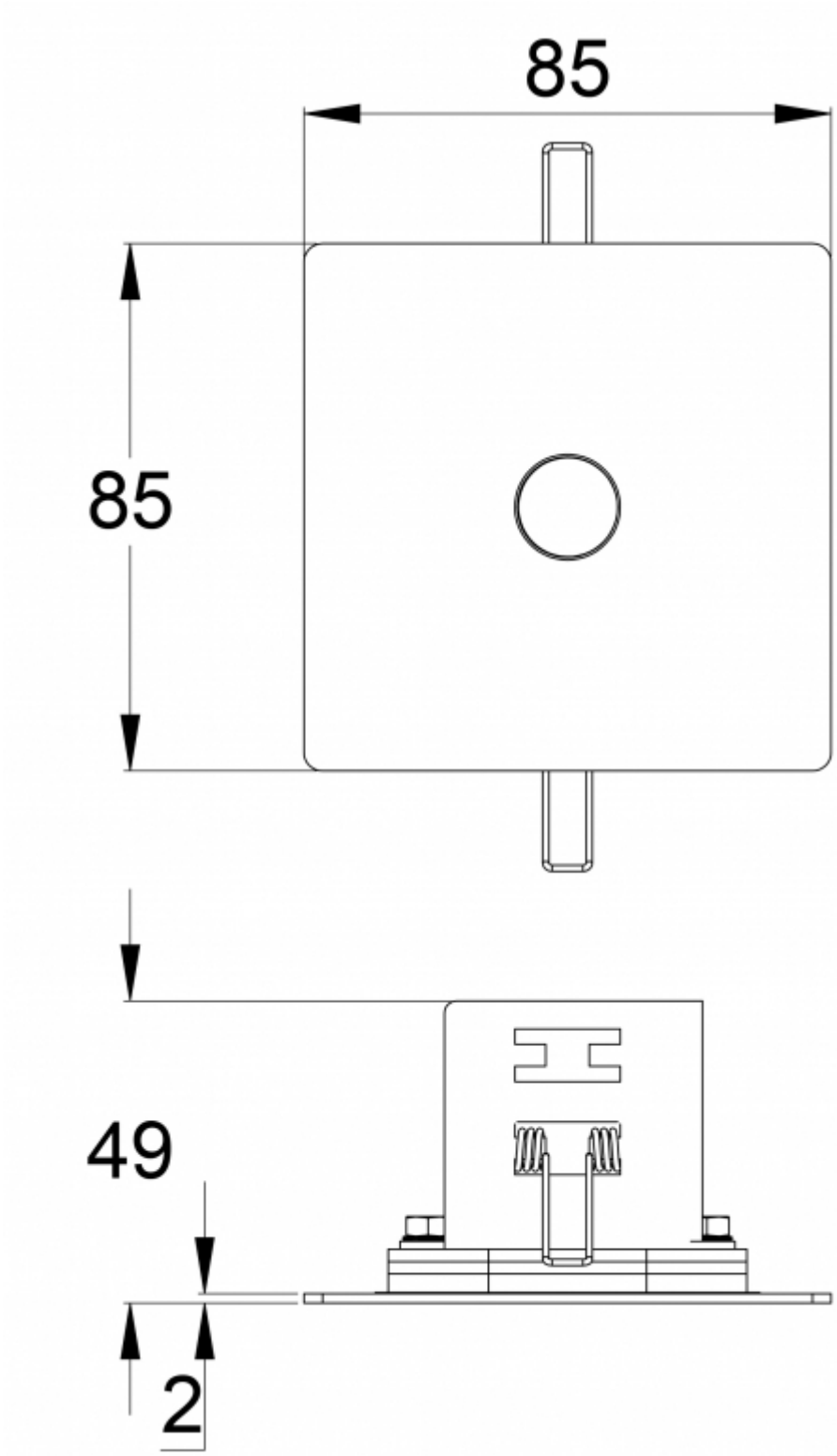

We reserve the rights to make modifications without notice.
Copyright © 2024 Teknoware. All rights reserved.
Date: May 20, 2024 | Source:
www.teknoware.com/en/emergency-lighting-1/slimspot-ii-zone-lowbay-emergency-light-twta253wm

Teknoware Oy | P.O. Box 19, 15101 Lahti | Ilmarisentie 8, 15200 Lahti Finland
Tel +358 3 883 020 | VAT-number FI01494751 | teknoware.com | emexit@teknoware.com

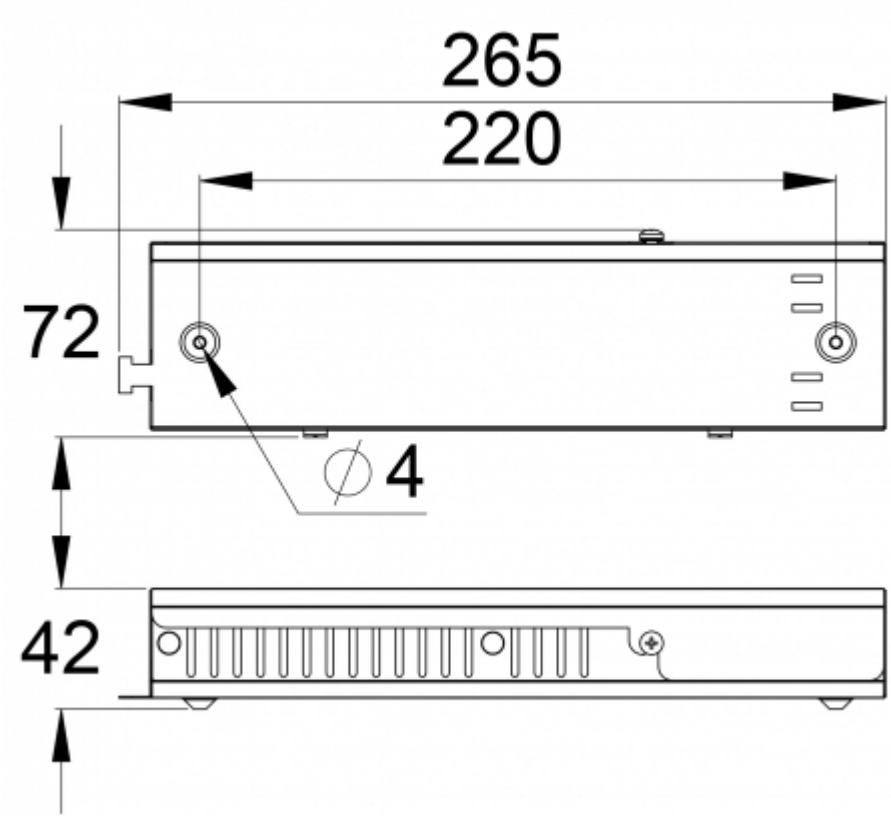

We reserve the rights to make modifications without notice.
Copyright © 2024 Teknoware. All rights reserved.
Date: May 20, 2024 | Source:
www.teknoware.com/en/emergency-lighting-1/slimspot-ii-zone-lowbay-emergency-light-twta253wm

Teknoware Oy | P.O. Box 19, 15101 Lahti | Ilmarisentie 8, 15200 Lahti Finland
Tel +358 3 883 020 | VAT-number FI01494751 | teknoware.com | emexit@teknoware.com